Mixing Console Test

FX100 Use Case

A leading manufacturer of mixing consoles was looking for an Audio test instrument that would significantly reduce the test time for the final inspection in on the production line.

The key challenge was to squeeze a wide scope of measurement types with broad specifications as well as operator interactions into a short test sequence.

Thanks to the outstanding performance and flexibility, NTi Audio's FX100 Audio analyzer + I/O switcher were selected as the preferred test solution.

The challenge

A high-volume manufacturer of mixing consoles was looking for an alternative for his current verification procedure in order to speed up the final check.

The new test procedure should be controlled by a PC and verify the full functionality of the consoles, i.e. including all I/O connectors and potentiometers, the monitor output, the built-in MP3 player etc.

The solution

After a brief analysis of the status quo it became clear that only a fast measuring instrument in combination with a thought-out system architecture could meet the requirements without boosting the system costs.

Consequently, the FX100 Audio analyzer was chosen together with the OS-0210 output and the IS-1002 input switchers.

Furthermore, NTi Audio programmed a customized Visual Basic script, based on the FX100 .NET API, which stepwise initiates the required tests, interacts with the operator regarding manual actions, and creates an extensive test report.

The new test setup successfully reduced the overall cycle time from approximately 30 minutes down to 6 minutes per mixing console.

Highlights

- Overall test cycle time reduced from 30 min down to 6 min.
- VB program controls the test sequence including manual interactions and test report generation.
- Test sequence includes reliable detection of rasping potentiometers.

A demo video showing the complete test sequence is available from NTi Audio upon request

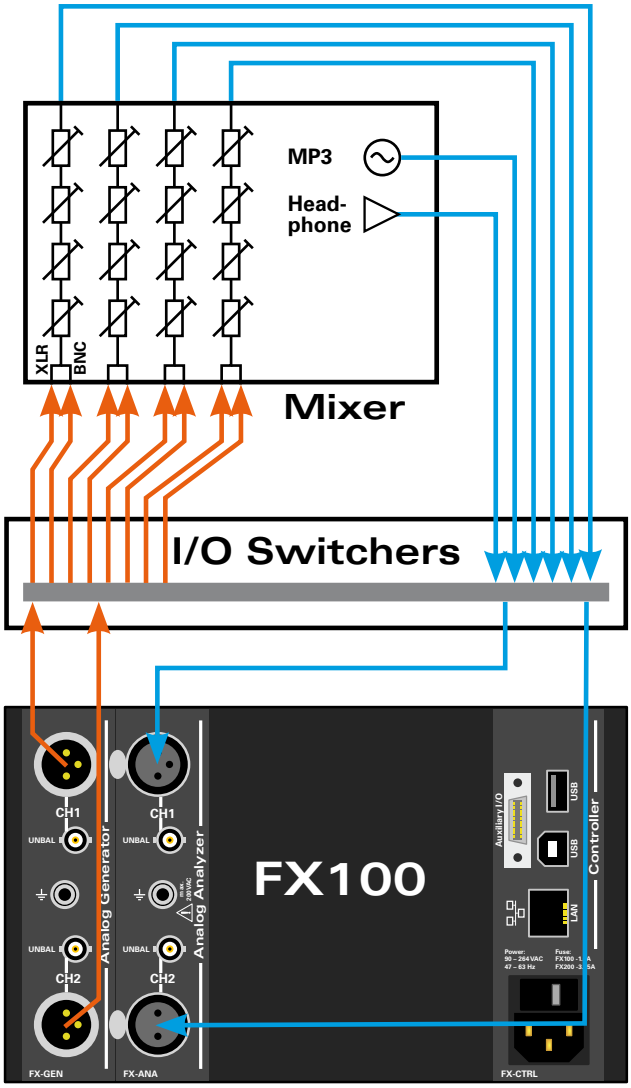

System overview

Hardware

- NTi Audio FX100 2-chn Audio analyzer
- NTi Audio OS-0210 Output switcher
- NTi Audio IS-1020 Input switcher

Control software

- Visual Basic program written by NTi Audio

Measurements

- GlideSweep frequency response
- Level, THD (Meter mode)
- Steepness for potentiometer scratch test
- Phantom power check
- FFT analysis for hum test

All information is subject to change without notice. FX100, OS-0210 and IS-1002 are Trademarks of NTi Audio AG.

NTi Audio AG
Im alten Riet 102
9494 Schaan
Liechtenstein, Europe
Phone +423 239 60 60
Fax +423 239 60 89
info@nti-audio.com

NTI Americas Inc.
PO Box 231027
Tigard, Oregon 97281
USA
Phone +1 503 684 7050
Fax +1 503 684 7051
americas@nti-audio.com

NTI China Ltd.
Room 722, 7F, Building 6-3A,
No 1388, Bin He Rd.
215000 Suzhou, China
Phone +86 512 6802 0075
Fax +86 512 6802 0097
china@nti-audio.com

NTI Japan Ltd.
Ryogokusakamoto Bldg. 1-8-4
Ryogoku, 130-0026 Sumida-ku
Tokyo, Japan
Phone +81 3 3634 6110
Fax +81 3 3634 6160
japan@nti-audio.com